Allegheny York

O-Ring Size and Installation Chart

O-Ring Size Chart and Installation Data

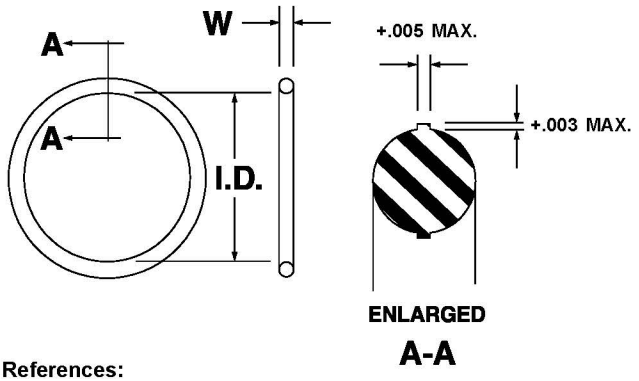

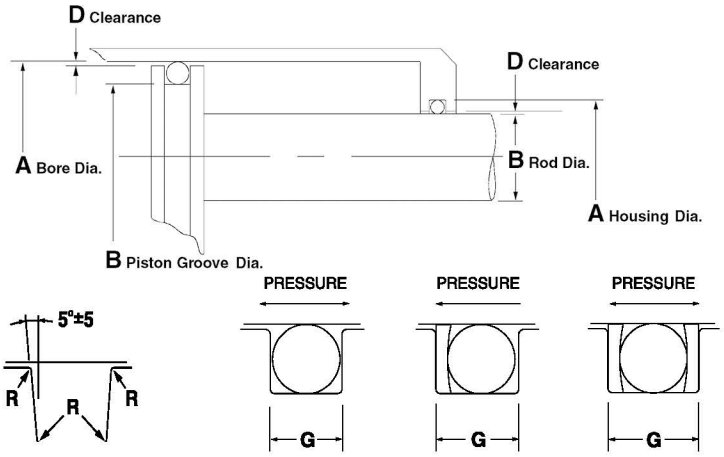

See groove width dimensions below

References:
AS568A Uniform Numbering System

Selection and Size

Groove Width Dimensions								
AS568A Dash Nos.	A Tolerance	B Tolerance	D Dia. Clearance		G +.005/-.000			R Radius
			Reciprocating/ Static	Rotary	No Backup	1 Backup	2 Backup	
004-012	+.001/-.000	+.000/-.001	+.002/-.004	+.012/.016	.093	.138	.205	.005-.015
013-050	+.002/-.000	+.000/-.001	+.002/-.005	+.012/.016	.093	.138	.205	.005-.015
102-129	+.002/-.000	+.000/-.002	+.002/-.005	+.012/.016	.140	.171	.238	.005-.015
130-178	+.002/-.000	+.000/-.002	+.002/-.006	+.012/.016	.140	.171	.238	.005-.015
201-284	+.002/-.000	+.000/-.002	+.002/-.006	+.016/.020	.187	.208	.275	.010-.025
309-395	+.002/-.000	+.000/-.002	+.003/-.007	+.016/.020	.281	.311	.410	.020-.030
425-475	+.003/-.000	+.000/-.003	+.004/-.010	+.016/.020	.375	.408	.538	.020-.030

SIZE CHART						INSTALLATION DATA - GROOVE DIMENSIONS									
UNIVERSAL SERIES AS568A DASH NOS.	NOMINAL SIZE			ACTUAL SIZE		RECIPROCATING SEALS				STATIC SEALS				ROTARY SEALS	
						I.D. SEALING		O.D. SEALING		I.D. SEALING		O.D. SEALING		I.D. SEALING	
	I.D.	O.D.	W.	I.D.	W.	A	B	A	B	A	B	A	B	A	B
2-001	1/32	3/32	1/32	0.029 ±.004	0.040 ±.003					0.101	0.040	0.105	0.044		
2-001.5	1/16	1/8	1/32	0.070 ±.004	0.040 ±.003					0.142	0.081	0.146	0.085		
2-002	3/64	9/64	3/64	0.042 ±.004	0.050 ±.003					0.132	0.053	0.138	0.059		
2-003	1/16	3/16	1/16	0.056 ±.004	0.060 ±.003					0.162	0.067	0.172	0.077		
2-004	5/64	13/64	1/16	0.070 ±.005	0.070 ±.003					0.181	0.081	0.206	0.106	0.202	0.072
2-005	3/32	7/32	1/16	0.101 ±.005	0.070 ±.003					0.212	0.112	0.237	0.137	0.233	0.103
2-006	1/8	1/4	1/16	0.114 ±.005	0.070 ±.003	0.234	0.124	0.249	0.139	0.225	0.125	0.250	0.150	0.246	0.116
2-007	5/32	9/32	1/16	0.145 ±.005	0.070 ±.003	0.265	0.155	0.280	0.170	0.256	0.156	0.281	0.181	0.277	0.147
2-008	3/16	5/16	1/16	0.176 ±.005	0.070 ±.003	0.296	0.186	0.311	0.201	0.287	0.187	0.312	0.212	0.308	0.178
2-009	7/32	11/32	1/16	0.208 ±.005	0.070 ±.003	0.328	0.218	0.343	0.233	0.318	0.218	0.343	0.243	0.340	0.210
2-010	1/4	3/8	1/16	0.239 ±.005	0.070 ±.003	0.359	0.249	0.374	0.264	0.350	0.250	0.375	0.275	0.371	0.241
2-011	5/16	7/16	1/16	0.301 ±.005	0.070 ±.003	0.421	0.311	0.436	0.326	0.412	0.312	0.437	0.337	0.433	0.303
2-012	3/8	1/2	1/16	0.364 ±.005	0.070 ±.003	0.484	0.374	0.499	0.389	0.475	0.375	0.500	0.400	0.496	0.366
2-013	7/16	9/16	1/16	0.426 ±.005	0.070 ±.003					0.537	0.437	0.562	0.462	0.558	0.428
2-014	1/2	5/8	1/16	0.489 ±.005	0.070 ±.003					0.600	0.500	0.625	0.525	0.621	0.491
2-015	9/16	11/16	1/16	0.551 ±.007	0.070 ±.003					0.662	0.562	0.687	0.587	0.683	0.553
2-016	5/8	3/4	1/16	0.614 ±.009	0.070 ±.003					0.725	0.625	0.750	0.650	0.746	0.616
2-017	11/16	13/16	1/16	0.676 ±.009	0.070 ±.003					0.787	0.687	0.812	0.712	0.808	0.678
2-018	3/4	7/8	1/16	0.739 ±.009	0.070 ±.003					0.850	0.750	0.875	0.775	0.871	0.741
2-019	13/16	15/16	1/16	0.801 ±.009	0.070 ±.003					0.912	0.812	0.937	0.837	0.933	0.803
2-020	7/8	1	1/16	0.864 ±.009	0.070 ±.003					0.975	0.875	1.000	0.900	0.996	0.866
2-021	15/16	1-1/16	1/16	0.926 ±.009	0.070 ±.003					1.037	0.937	1.062	0.962	1.058	0.928
2-022	1	1-1/8	1/16	0.989 ±.010	0.070 ±.003					1.100	1.000	1.125	1.025	1.121	0.991
2-023	1-1/16	1-3/16	1/16	1.051 ±.010	0.070 ±.003					1.162	1.062	1.187	1.087	1.183	1.053
2-024	1-1/8	1-1/4	1/16	1.114 ±.010	0.070 ±.003					1.225	1.125	1.250	1.150	1.246	1.116
2-025	1-3/16	1-5/16	1/16	1.176 ±.011	0.070 ±.003					1.287	1.187	1.312	1.212	1.308	1.178

Allegheny York

O-Ring Size and Installation Chart, cont'd.

SIZE CHART						INSTALLATION DATA - GROOVE DIMENSIONS									
UNIVERSAL SERIES AS568A DASH NOS.	NOMINAL SIZE			ACTUAL SIZE		RECIPROCATING SEALS				STATIC SEALS				ROTARY SEALS	
						I.D. SEALING		O.D. SEALING		I.D. SEALING		O.D. SEALING		I.D. SEALING	
	I.D.	O.D.	W.	I.D.	W.	A	B	A	B	A	B	A	B	A	B
2-026	1-1/4	1-3/8	1/16	1.239 ±.011	0.070 ±.003					1.350	1.250	1.375	1.275	1.371	1.241
2-027	1-5/16	1-7/16	1/16	1.301 ±.011	0.070 ±.003					1.412	1.312	1.437	1.337	1.433	1.303
2-028	1-3/8	1-1/2	1/16	1.364 ±.013	0.070 ±.003					1.475	1.375	1.500	1.400	1.496	1.366
2-029	1-1/2	1-5/8	1/16	1.489 ±.013	0.070 ±.003					1.600	1.500	1.625	1.525	1.621	1.491
2-030	1-5/8	1-3/4	1/16	1.614 ±.013	0.070 ±.003					1.725	1.625	1.750	1.650	1.746	1.616
2-031	1-3/4	1-7/8	1/16	1.739 ±.015	0.070 ±.003					1.850	1.750	1.875	1.775	1.871	1.741
2-032	1-7/8	2	1/16	1.864 ±.015	0.070 ±.003					1.975	1.875	2.000	1.900	1.996	1.866
2-033	2	2-1/8	1/16	1.989 ±.018	0.070 ±.003					2.100	2.000	2.125	2.025	2.121	1.991
2-034	2-1/8	2-1/4	1/16	2.114 ±.018	0.070 ±.003					2.225	2.125	2.250	2.150	2.246	2.116
2-035	2-1/4	2-3/8	1/16	2.239 ±.018	0.070 ±.003					2.350	2.250	2.375	2.275	2.371	2.241
2-036	2-3/8	2-1/2	1/16	2.364 ±.018	0.070 ±.003					2.475	2.375	2.500	2.400	2.496	2.366
2-037	2-1/2	2-5/8	1/16	2.489 ±.010	0.070 ±.003					2.600	2.500	2.625	2.525	2.621	2.491
2-038	2-5/8	2-3/4	1/16	2.614 ±.020	0.070 ±.003					2.725	2.625	2.750	2.650	2.746	2.616
2-039	2-3/4	2-7/8	1/16	2.739 ±.020	0.070 ±.003					2.850	2.750	2.875	2.775	2.871	2.741
2-040	2-7/8	3	1/16	2.864 ±.020	0.070 ±.003					2.975	2.875	3.000	2.900	2.996	2.866
2-041	3	3-1/8	1/16	2.989 ±.024	0.070 ±.003					3.100	3.000	3.125	3.025	3.121	2.991
2-042	3-1/4	3-3/8	1/16	3.239 ±.024	0.070 ±.003					3.350	3.250	3.375	3.275	3.371	3.241
2-043	3-1/2	3-5/8	1/16	3.489 ±.024	0.070 ±.003					3.600	3.500	3.625	3.525	3.621	3.491
2-044	3-3/4	3-7/8	1/16	3.739 ±.027	0.070 ±.003					3.850	3.750	3.875	3.775	3.871	3.741
2-045	4	4-1/8	1/16	3.989 ±.027	0.070 ±.003					4.100	4.000	4.125	4.025	4.121	3.991
2-046	4-1/4	4-3/8	1/16	4.239 ±.030	0.070 ±.003					4.350	4.250	4.375	4.275		
2-047	4-1/2	4-5/8	1/16	4.489 ±.030	0.070 ±.003					4.600	4.500	4.625	4.525		
2-048	4-3/4	4-7/8	1/16	4.739 ±.030	0.070 ±.003					4.850	4.750	4.875	4.775		
2-049	5	5-1/8	1/16	4.989 ±.037	0.070 ±.003					5.100	5.000	5.125	5.025		
2-050	5-1/4	5-3/8	1/16	5.239 ±.037	0.070 ±.003					5.350	5.250	5.375	5.275		
2-102	1/16	1/4	3/32	0.049 ±.005	0.103 ±.003					0.220	0.057	0.221	0.057	0.243	0.051
2-103	3/32	9/32	3/32	0.081 ±.005	0.103 ±.003					0.256	0.090	0.257	0.090	0.275	0.083
2-104	1/8	5/16	3/32	0.112 ±.005	0.103 ±.003	0.293	0.123	0.322	0.138	0.287	0.121	0.288	0.121	0.305	0.114
2-105	5/32	11/32	3/32	0.143 ±.005	0.103 ±.003	0.323	0.153	0.340	0.170	0.319	0.153	0.320	0.153	0.336	0.145
2-106	3/16	3/8	3/32	0.174 ±.005	0.103 ±.003	0.356	0.186	0.371	0.201	0.351	0.185	0.352	0.185	0.367	0.176
2-107	7/32	13/32	3/32	0.206 ±.005	0.103 ±.003	0.376	0.216	0.401	0.231	0.383	0.217	0.384	0.217	0.399	0.208
2-108	1/4	7/16	3/32	0.237 ±.005	0.103 ±.003	0.417	0.247	0.432	0.262	0.416	0.250	0.417	0.250	0.440	0.239
2-109	5/16	1/2	3/32	0.299 ±.005	0.103 ±.003	0.479	0.309	0.494	0.324	0.479	0.313	0.480	0.313	0.492	0.301
2-110	3/8	9/16	3/32	0.362 ±.005	0.103 ±.003	0.550	0.374	0.562	0.386	0.537	0.375	0.562	0.400	0.558	0.364
2-111	7/16	5/8	3/32	0.424 ±.005	0.103 ±.003	0.612	0.436	0.624	0.448	0.599	0.437	0.625	0.463	0.620	0.426
2-112	1/2	11/16	3/32	0.487 ±.005	0.103 ±.003	0.675	0.499	0.687	0.511	0.662	0.500	0.687	0.525	0.683	0.489
2-113	9/16	3/4	3/32	0.549 ±.007	0.103 ±.003	0.737	0.561	0.749	0.573	0.724	0.562	0.750	0.588	0.745	0.551
2-114	5/8	13/16	3/32	0.612 ±.009	0.103 ±.003	0.800	0.624	0.812	0.636	0.787	0.625	0.812	0.650	0.808	0.614
2-115	11/16	7/8	3/32	0.674 ±.009	0.103 ±.003	0.862	0.686	0.874	0.698	0.849	0.687	0.875	0.713	0.870	0.676
2-116	3/4	15/16	3/32	0.737 ±.009	0.103 ±.003	0.925	0.749	0.937	0.761	0.912	0.750	0.937	0.775	0.933	0.739
2-117	13/16	1	3/32	0.799 ±.010	0.103 ±.003					0.974	0.812	1.000	0.838	0.995	0.801
2-118	7/8	1-1/16	3/32	0.862 ±.010	0.103 ±.003					1.037	0.875	1.062	0.900	1.058	0.864
2-119	15/16	1-1/8	3/32	0.924 ±.010	0.103 ±.003					1.099	0.937	1.125	0.963	1.120	0.926
2-120	1	1-3/16	3/32	0.987 ±.010	0.103 ±.003					1.162	1.000	1.187	1.025	1.183	0.989
2-121	1-1/16	1-1/4	3/32	1.049 ±.010	0.103 ±.003					1.224	1.062	1.250	1.088	1.245	1.051
2-122	1-1/8	1-5/16	3/32	1.112 ±.010	0.103 ±.003					1.287	1.125	1.312	1.150	1.308	1.114
2-123	1-3/16	1-3/8	3/32	1.174 ±.012	0.103 ±.003					1.349	1.187	1.375	1.213	1.370	1.176
2-124	1-1/4	1-7/16	3/32	1.237 ±.012	0.103 ±.003					1.412	1.250	1.437	1.275	1.433	1.239
2-125	1-5/16	1-1/2	3/32	1.299 ±.012	0.103 ±.003					1.474	1.312	1.500	1.338	1.495	1.301
2-126	1-3/8	1-9/16	3/32	1.362 ±.012	0.103 ±.003					1.537	1.375	1.562	1.400	1.558	1.364
2-127	1-7/16	1-5/8	3/32	1.424 ±.012	0.103 ±.003					1.599	1.437	1.625	1.463	1.620	1.426
2-128	1-1/2	1-11/16	3/32	1.487 ±.012	0.103 ±.003					1.662	1.500	1.687	1.525	1.683	1.489
2-129	1-9/16	1-3/4	3/32	1.549 ±.015	0.103 ±.003					1.724	1.562	1.750	1.588	1.745	1.551
2-130	1-5/8	1-13/16	3/32	1.612 ±.015	0.103 ±.003					1.787	1.625	1.812	1.650	1.808	1.614
2-131	1-11/16	1-7/8	3/32	1.674 ±.015	0.103 ±.003					1.849	1.687	1.875	1.713	1.870	1.676
2-132	1-3/4	1-15/16	3/32	1.737 ±.015	0.103 ±.003					1.912	1.750	1.937	1.775	1.933	1.739
2-133	1-13/16	2	3/32	1.799 ±.015	0.103 ±.003					1.974	1.812	2.000	1.838	1.995	1.801
2-134	1-7/8	2-1/16	3/32	1.862 ±.015	0.103 ±.003					2.037	1.875	2.062	1.900	2.058	1.864
2-135	1-15/16	2-1/8	3/32	1.925 ±.017	0.103 ±.003					2.099	1.937	2.125	1.963	2.121	1.927
2-136	2	2-3/16	3/32	1.987 ±.017	0.103 ±.003					2.162	2.000	2.187	2.025	2.183	1.989
2-137	2-1/16	2-1/4	3/32	2.050 ±.017	0.103 ±.003					2.224	2.062	2.250	2.088	2.246	2.052
2-138	2-1/8	2-5/16	3/32	2.112 ±.017	0.103 ±.003					2.287	2.125	2.312	2.150	2.308	2.114
2-139	2-3/16	2-3/8	3/32	2.175 ±.017	0.103 ±.003					2.349	2.187	2.375	2.213	2.371	2.177
2-140	2-1/4	2-7/16	3/32	2.237 ±.017	0.103 ±.003					2.412	2.250	2.437	2.275	2.433	2.239
2-141	2-5/16	2-1/2	3/32	2.300 ±.020	0.103 ±.003					2.474	2.312	2.500	2.338	2.496	2.302
2-142	2-3/8	2-9/16	3/32	2.362 ±.020	0.103 ±.003					2.537	2.375	2.562	2.400	2.558	2.364
2-143	2-7/16	2-5/8	3/32	2.425 ±.020	0.103 ±.003					2.599	2.437	2.625	2.463	2.621	2.427
2-144	2-1/2	2-11/16	3/32	2.487 ±.020	0.103 ±.003					2.662	2.500	2.687	2.525	2.683	2.489
2-145	2-9/16	2-3/4	3/32	2.550 ±.020	0.103 ±.003					2.724	2.562	2.750	2.588	2.746	2.552
2-146	2-5/8	2-13/16	3/32	2.612 ±.020	0.103 ±.003					2.787	2.625	2.812	2.650	2.808	2.614

Allegheny York

O-Ring Size and Installation Chart, cont'd.

SIZE CHART						INSTALLATION DATA - GROOVE DIMENSIONS									
UNIVERSAL SERIES AS568A DASH NOS.	NOMINAL SIZE			ACTUAL SIZE		RECIPROCATING SEALS				STATIC SEALS				ROTARY SEALS	
						I.D. SEALING		O.D. SEALING		I.D. SEALING		O.D. SEALING		I.D. SEALING	
	I.D.	O.D.	W.	I.D.	W.	A	B	A	B	A	B	A	B	A	B
2-147	2-11/16	2-7/8	3/32	2.675 ±.022	0.103 ±.003					2.849	2.687	2.875	2.713	2.871	2.677
2-148	2-3/4	2-15/16	3/32	2.737 ±.022	0.103 ±.003					2.912	2.750	2.937	2.775	2.933	2.739
2-149	2-13/16	3	3/32	2.800 ±.022	0.103 ±.003					2.974	2.812	3.000	2.838	2.996	2.802
2-150	2-7/8	3-1/16	3/32	2.862 ±.022	0.103 ±.003					2.037	2.875	3.062	2.900	3.058	2.864
2-151	3	3-3/16	3/32	2.987 ±.024	0.103 ±.003					3.162	3.000	3.187	3.025	3.183	2.989
2-152	3-1/4	3-7/16	3/32	3.237 ±.024	0.103 ±.003					3.412	3.250	3.437	3.275	3.433	3.239
2-153	3-1/2	3-11/16	3/32	3.487 ±.024	0.103 ±.003					3.662	3.500	3.687	3.525	3.683	3.489
2-154	3-3/4	3-15/16	3/32	3.737 ±.028	0.103 ±.003					3.912	3.750	3.937	3.775	3.933	3.739
2-155	4	4-3/16	3/32	3.987 ±.028	0.103 ±.003					4.162	4.000	4.187	4.025	4.183	3.989
2-156	4-1/4	4-7/16	3/32	4.237 ±.030	0.103 ±.003					4.412	4.250	4.437	4.275	4.433	4.239
2-157	4-1/2	4-11/16	3/32	4.487 ±.030	0.103 ±.003					4.662	4.500	4.687	4.525	4.683	4.489
2-158	4-3/4	4-15/16	3/32	4.737 ±.035	0.103 ±.003					4.912	4.570	4.937	4.775	4.933	4.739
2-159	5	5-3/16	3/32	4.987 ±.035	0.103 ±.003					5.162	5.000	5.187	5.025	5.183	4.989
2-160	5-1/4	5-7/16	3/32	5.237 ±.035	0.103 ±.003					5.412	5.250	5.437	5.275	5.433	5.239
2-161	5-1/2	5-11/16	3/32	5.487 ±.035	0.103 ±.003					5.662	5.500	5.687	5.525	5.683	5.489
2-162	5-3/4	5-15/16	3/32	5.737 ±.035	0.103 ±.003					5.912	5.750	5.937	5.775	5.933	5.739
2-163	6	6-3/16	3/32	5.987 ±.040	0.103 ±.003					6.162	6.000	6.187	6.025	6.183	5.989
2-164	6-1/4	6-7/16	3/32	6.237 ±.040	0.103 ±.003					6.412	6.250	6.437	6.275		
2-165	6-1/2	6-11/16	3/32	6.487 ±.040	0.103 ±.003					6.662	6.500	6.687	6.525		
2-166	6-3/4	6-15/16	3/32	6.737 ±.040	0.103 ±.003					6.912	6.750	6.937	6.775		
2-167	7	7-3/16	3/32	6.987 ±.040	0.103 ±.003					7.162	7.000	7.187	7.025		
2-168	7-1/4	7-7/16	3/32	7.237 ±.045	0.103 ±.003					7.412	7.250	7.437	7.275		
2-169	7-1/2	7-11/16	3/32	7.487 ±.045	0.103 ±.003					7.662	7.500	7.687	7.525		
2-170	7-3/4	7-15/16	3/32	7.737 ±.045	0.103 ±.003					7.912	7.750	7.937	7.775		
2-171	8	8-3/16	3/32	7.987 ±.045	0.103 ±.003					8.162	8.000	8.187	8.025		
2-172	8-1/4	8-7/16	3/32	8.237 ±.050	0.103 ±.003					8.412	8.250	8.437	8.275		
2-173	8-1/2	8-11/16	3/32	8.487 ±.050	0.103 ±.003					8.662	8.500	8.687	8.525		
2-174	8-3/4	8-15/16	3/32	8.737 ±.050	0.103 ±.003					8.912	8.750	8.937	8.775		
2-175	9	9-3/16	3/32	8.987 ±.050	0.103 ±.003					9.162	9.000	9.187	9.025		
2-176	9-1/4	9-7/16	3/32	9.237 ±.055	0.103 ±.003					9.412	9.250	9.437	9.275		
2-177	9-1/2	9-11/16	3/32	9.487 ±.055	0.103 ±.003					9.662	9.500	9.687	9.525		
2-178	9-3/4	9-15/16	3/32	9.737 ±.055	0.103 ±.003					9.912	9.750	9.937	9.775		
2-201	3/16	7/16	1/8	0.171 ±.005	0.139 ±.004	0.427	0.181	0.442	0.196	0.408	0.182	0.408	0.182	0.440	0.172
2-202	1/4	1/2	1/8	0.234 ±.005	0.139 ±.004	0.490	0.244	0.505	0.259	0.474	0.247	0.474	0.247	0.503	0.235
2-203	5/16	9/16	1/8	0.296 ±.005	0.139 ±.004	0.552	0.306	0.568	0.322	0.539	0.310	0.539	0.310	0.565	0.297
2-204	3/8	5/8	1/8	0.359 ±.005	0.139 ±.004	0.615	0.369	0.630	0.384	0.601	0.374	0.601	0.374	0.628	0.360
2-205	7/16	11/16	1/8	0.421 ±.005	0.139 ±.004	0.679	0.433	0.691	0.445	0.664	0.438	0.664	0.438	0.690	0.422
2-206	1/2	3/4	1/8	0.484 ±.005	0.139 ±.004	0.742	0.496	0.754	0.508	0.729	0.502	0.729	0.502	0.753	0.485
2-207	9/16	13/16	1/8	0.546 ±.007	0.139 ±.004	0.803	0.557	0.815	0.569	0.792	0.565	0.792	0.565	0.815	0.547
2-208	5/8	7/8	1/8	0.609 ±.009	0.139 ±.004	0.867	0.621	0.879	0.633	0.858	0.631	0.858	0.631	0.878	0.610
2-209	11/16	15/16	1/8	0.671 ±.009	0.139 ±.004	0.927	0.681	0.940	0.694	0.921	0.695	0.921	0.695	0.940	0.672
2-210	3/4	1	1/8	0.734 ±.010	0.139 ±.004	0.990	0.748	1.000	0.758	0.972	0.750	1.000	0.778	1.002	0.736
2-211	13/16	1-1/16	1/8	0.796 ±.010	0.139 ±.004	1.052	0.810	1.062	0.820	1.034	0.812	1.062	0.840	1.064	0.798
2-212	7/8	1-1/8	1/8	0.859 ±.010	0.139 ±.004	1.115	0.873	1.125	0.883	1.097	0.875	1.125	0.903	1.127	0.861
2-213	15/16	1-3/16	1/8	0.921 ±.010	0.139 ±.004	1.177	0.935	1.187	0.945	1.159	0.937	1.187	0.965	1.189	0.923
2-214	1	1-1/4	1/8	0.984 ±.010	0.139 ±.004	1.240	0.998	1.250	1.008	1.222	1.000	1.250	1.028	1.252	0.986
2-215	1-1/16	1-5/16	1/8	1.046 ±.010	0.139 ±.004	1.302	1.060	1.312	1.070	1.284	1.062	1.312	1.090	1.314	1.048
2-216	1-1/8	1-3/8	1/8	1.109 ±.012	0.139 ±.004	1.365	1.123	1.375	1.133	1.347	1.125	1.375	1.153	1.377	1.111
2-217	1-3/16	1-7/16	1/8	1.171 ±.012	0.139 ±.004	1.427	1.185	1.437	1.195	1.409	1.187	1.437	1.215	1.439	1.173
2-218	1-1/4	1-1/2	1/8	1.234 ±.012	0.139 ±.004	1.490	1.248	1.500	1.258	1.472	1.250	1.500	1.278	1.502	1.236
2-219	1-5/16	1-9/16	1/8	1.296 ±.012	0.139 ±.004	1.552	1.310	1.562	1.320	1.534	1.312	1.562	1.340	1.564	1.298
2-220	1-3/8	1-5/8	1/8	1.359 ±.012	0.139 ±.004	1.615	1.373	1.625	1.383	1.597	1.375	1.625	1.403	1.627	1.361
2-221	1-7/16	1-11/16	1/8	1.421 ±.012	0.139 ±.004	1.677	1.435	1.687	1.445	1.659	1.437	1.687	1.465	1.689	1.423
2-222	1-1/2	1-3/4	1/8	1.484 ±.015	0.139 ±.004	1.740	1.498	1.750	1.508	1.722	1.500	1.750	1.528	1.752	1.486
2-223	1-5/8	1-7/8	1/8	1.609 ±.015	0.139 ±.004					1.847	1.625	1.875	1.653	1.877	1.611
2-224	1-3/4	2	1/8	1.734 ±.015	0.139 ±.004					1.972	1.750	2.000	1.778	2.002	1.736
2-225	1-7/8	2-1/8	1/8	1.859 ±.018	0.139 ±.004					2.097	1.875	2.125	1.903	2.127	1.861
2-226	2	2-1/4	1/8	1.984 ±.018	0.139 ±.004					2.222	2.000	2.250	2.028	2.252	1.986
2-227	2-1/8	2-3/8	1/8	2.109 ±.018	0.139 ±.004					2.347	2.125	2.375	2.153	2.377	2.111
2-228	2-1/4	2-1/2	1/8	2.234 ±.020	0.139 ±.004					2.472	2.250	2.500	2.278	2.502	2.236
2-229	2-3/8	2-5/8	1/8	2.359 ±.020	0.139 ±.004					2.597	2.375	2.625	2.403	2.627	2.361
2-230	2-1/2	2-3/4	1/8	2.484 ±.020	0.139 ±.004					2.722	2.500	2.750	2.528	2.752	2.486
2-231	2-5/8	2-7/8	1/8	2.609 ±.020	0.139 ±.004					2.847	2.625	2.875	2.653	2.877	2.611
2-232	2-3/4	3	1/8	2.734 ±.024	0.139 ±.004					2.972	2.750	3.000	2.778	3.002	2.736
2-233	2-7/8	3-1/8	1/8	2.859 ±.024	0.139 ±.004					3.097	2.875	3.125	2.903	3.127	2.861
2-234	3	3-1/4	1/8	2.984 ±.024	0.139 ±.004					3.222	3.000	3.250	3.028	3.252	2.986
2-235	3-1/8	3-3/8	1/8	3.109 ±.024	0.139 ±.004					3.347	3.125	3.375	3.153	3.377	3.111
2-236	3-1/4	3-1/2	1/8	3.234 ±.024	0.139 ±.004					3.472	3.250	3.500	3.278	3.502	3.236
2-237	3-3/8	3-5/8	1/8	3.359 ±.024	0.139 ±.004					3.597	3.375	3.625	3.403	3.627	3.361
2-238	3-1/2	3-3/4	1/8	3.484 ±.024	0.139 ±.004					3.722	3.500	3.750	3.528	3.752	3.486

Allegheny York

O-Ring Size and Installation Chart, cont'd.

SIZE CHART						INSTALLATION DATA - GROOVE DIMENSIONS									
UNIVERSAL SERIES AS568A DASH NOS.	NOMINAL SIZE			ACTUAL SIZE		RECIPROCATING SEALS				STATIC SEALS				ROTARY SEALS	
						I.D. SEALING		O.D. SEALING		I.D. SEALING		O.D. SEALING		I.D. SEALING	
	I.D.	O.D.	W.	I.D.	W.	A	B	A	B	A	B	A	B	A	B
2-239	3-5/8	3-7/8	1/8	3.609 ±.028	0.139 ±.004					3.847	3.625	3.875	3.653	3.877	3.611
2-240	3-3/4	4	1/8	3.734 ±.028	0.139 ±.004					3.972	3.750	4.000	3.778	4.002	3.736
2-241	3-7/8	4-1/8	1/8	3.859 ±.028	0.139 ±.004					4.097	3.875	4.125	3.903	4.127	3.861
2-242	4	4-1/4	1/8	3.984 ±.028	0.139 ±.004					4.222	4.000	4.250	4.028	4.252	3.986
2-243	4-1/8	4-3/8	1/8	4.109 ±.028	0.139 ±.004					4.347	4.125	4.375	4.153	4.377	4.111
2-244	4-1/4	4-1/2	1/8	4.234 ±.030	0.139 ±.004					4.472	4.250	4.500	4.278	4.502	4.236
2-245	4-3/8	4-5/8	1/8	4.359 ±.030	0.139 ±.004					4.597	4.375	4.625	4.403	4.627	4.361
2-246	4-1/2	4-3/4	1/8	4.484 ±.030	0.139 ±.004					4.722	4.500	4.750	4.528	4.752	4.486
2-247	4-5/8	4-7/8	1/8	4.609 ±.030	0.139 ±.004					4.847	4.625	4.875	4.653	4.877	4.611
2-248	4-3/4	5	1/8	4.734 ±.030	0.139 ±.004					4.972	4.750	5.000	4.778	5.002	4.736
2-249	4-7/8	5-1/8	1/8	4.859 ±.035	0.139 ±.004					5.097	4.875	5.125	4.903	5.127	4.861
2-250	5	5-1/4	1/8	4.984 ±.035	0.139 ±.004					5.222	5.000	5.250	5.028	5.252	4.986
2-251	5-1/8	5-3/8	1/8	5.109 ±.035	0.139 ±.004					5.347	5.125	5.375	5.153	5.377	5.111
2-252	5-1/4	5-1/2	1/8	5.234 ±.035	0.139 ±.004					5.472	5.250	5.500	5.278	5.502	5.236
2-253	5-3/8	5-5/8	1/8	5.359 ±.035	0.139 ±.004					5.597	5.375	5.625	5.403	5.627	5.361
2-254	5-1/2	5-3/4	1/8	5.484 ±.035	0.139 ±.004					5.722	5.500	5.750	5.528	5.752	5.486
2-255	5-5/8	5-7/8	1/8	5.609 ±.035	0.139 ±.004					5.847	5.625	5.875	5.653	5.877	5.611
2-256	5-3/4	6	1/8	5.734 ±.035	0.139 ±.004					5.972	5.750	6.000	5.778	6.002	5.736
2-257	5-7/8	6-1/8	1/8	5.859 ±.035	0.139 ±.004					6.097	5.875	6.125	5.903	6.127	5.861
2-258	6	6-1/4	1/8	5.984 ±.035	0.139 ±.004					6.222	6.000	6.250	6.028	6.252	5.986
2-259	6-1/4	6-1/2	1/8	6.234 ±.040	0.139 ±.004					6.472	6.250	6.500	6.278		
2-260	6-1/2	6-3/4	1/8	6.484 ±.040	0.139 ±.004					6.722	6.500	6.750	6.528		
2-261	6-3/4	7	1/8	6.734 ±.040	0.139 ±.004					6.972	6.750	7.000	6.778		
2-262	7	7-1/4	1/8	6.984 ±.040	0.139 ±.004					7.222	7.000	7.250	7.028		
2-263	7-1/4	7-1/2	1/8	7.234 ±.045	0.139 ±.004					7.472	7.250	7.500	7.278		
2-264	7-1/2	7-3/4	1/8	7.484 ±.045	0.139 ±.004					7.722	7.500	7.750	7.528		
2-265	7-3/4	8	1/8	7.734 ±.045	0.139 ±.004					7.972	7.750	8.000	7.778		
2-266	8	8-1/4	1/8	7.984 ±.045	0.139 ±.004					8.222	8.000	8.250	8.028		
2-267	8-1/4	8-1/2	1/8	8.234 ±.050	0.139 ±.004					8.472	8.250	8.500	8.278		
2-268	8-1/2	8-3/4	1/8	8.484 ±.050	0.139 ±.004					8.722	8.500	8.750	8.528		
2-269	8-3/4	9	1/8	8.734 ±.050	0.139 ±.004					8.972	8.750	9.000	8.778		
2-270	9	9-1/4	1/8	8.984 ±.050	0.139 ±.004					9.222	9.000	9.250	9.028		
2-271	9-1/4	9-1/2	1/8	9.234 ±.055	0.139 ±.004					9.472	9.250	9.500	9.278		
2-272	9-1/2	9-3/4	1/8	9.484 ±.055	0.139 ±.004					9.722	9.500	9.750	9.528		
2-273	9-3/4	10	1/8	9.734 ±.055	0.139 ±.004					9.972	9.750	10.000	9.778		
2-274	10	10-1/4	1/8	9.984 ±.055	0.139 ±.004					10.222	10.000	10.250	10.028		
2-275	10-1/2	10-3/4	1/8	10.484 ±.055	0.139 ±.004					10.722	10.500	10.750	10.528		
2-276	11	11-1/4	1/8	10.984 ±.065	0.139 ±.004					11.222	11.000	11.250	11.028		
2-277	11-1/2	11-3/4	1/8	11.484 ±.065	0.139 ±.004					11.722	11.500	11.750	11.528		
2-278	12	12-1/4	1/8	11.984 ±.065	0.139 ±.004					12.222	12.000	12.250	12.028		
2-279	13	13-1/4	1/8	12.984 ±.065	0.139 ±.004					13.222	13.000	13.250	13.028		
2-280	14	14-1/4	1/8	13.984 ±.065	0.139 ±.004					14.222	14.000	14.250	14.028		
2-281	15	15-1/4	1/8	14.984 ±.065	0.139 ±.004					15.222	15.000	15.250	15.028		
2-282	16	16-1/4	1/8	15.955 ±.075	0.139 ±.004					16.222	16.000	16.250	16.028		
2-283	17	17-1/4	1/8	16.955 ±.080	0.139 ±.004					17.222	17.000	17.250	17.028		
2-284	18	18-1/4	1/8	17.955 ±.085	0.139 ±.004					18.222	18.000	18.250	18.028		
2-309	7/16	13/16	3/16	0.412 ±.005	0.210 ±.005	0.800	0.424	0.812	0.436	0.773	0.428	0.774	0.430		
2-310	1/2	7/8	3/16	0.475 ±.005	0.210 ±.005	0.863	0.487	0.875	0.499	0.837	0.493	0.833	0.495		
2-311	9/16	15/16	3/16	0.537 ±.007	0.210 ±.005	0.925	0.549	0.937	0.561	0.900	0.556	0.901	0.558		
2-312	5/8	1	3/16	0.600 ±.009	0.210 ±.005	0.988	0.612	1.000	0.624	0.966	0.622	0.969	0.624		
2-313	11/16	1-1/16	3/16	0.662 ±.009	0.210 ±.005	1.050	0.674	1.062	0.686	1.029	0.685	1.030	0.687		
2-314	3/4	1-1/8	3/16	0.725 ±.010	0.210 ±.005	1.113	0.737	1.125	0.749	1.096	0.751	1.097	0.753		
2-315	13/16	1-3/16	3/16	0.787 ±.010	0.210 ±.005	1.177	0.801	1.187	0.811	1.158	0.814	1.159	0.816		
2-316	7/8	1-1/4	3/16	0.850 ±.010	0.210 ±.005	1.240	0.864	1.250	0.874	1.223	0.878	1.224	0.880		
2-317	15/16	1-5/16	3/16	0.912 ±.010	0.210 ±.005	1.302	0.926	1.312	0.936	1.285	0.941	1.286	0.943		
2-318	1	1-3/8	3/16	0.975 ±.010	0.210 ±.005	1.365	0.989	1.375	0.999	1.351	1.006	1.352	1.008		
2-319	1-1/16	1-7/16	3/16	1.037 ±.010	0.210 ±.005	1.427	1.051	1.437	1.061	1.414	1.069	1.415	1.071		
2-320	1-1/8	1-1/2	3/16	1.100 ±.012	0.210 ±.005	1.490	1.114	1.500	1.124	1.479	1.135	1.480	1.137		
2-321	1-3/16	1-9/16	3/16	1.162 ±.012	0.210 ±.005	1.552	1.176	1.562	1.186	1.543	1.198	1.544	1.200		
2-322	1-1/4	1-5/8	3/16	1.225 ±.012	0.210 ±.005	1.615	1.239	1.625	1.249	1.608	1.263	1.609	1.265		
2-323	1-5/16	1-11/16	3/16	1.287 ±.012	0.210 ±.005	1.677	1.301	1.687	1.311	1.670	1.326	1.671	1.328		
2-324	1-3/8	1-3/4	3/16	1.350 ±.012	0.210 ±.005	1.740	1.364	1.750	1.374	1.734	1.390	1.135	1.392		
2-325	1-1/2	1-7/8	3/16	1.475 ±.015	0.210 ±.005	1.868	1.498	1.875	1.505	1.840	1.500	1.875	1.535		
2-326	1-5/8	2	3/16	1.600 ±.015	0.210 ±.005	1.993	1.623	2.000	1.630	1.965	1.625	2.000	1.660		
2-327	1-3/4	2-1/8	3/16	1.725 ±.015	0.210 ±.005	2.118	1.748	2.125	1.755	1.090	1.750	2.125	1.785		
2-328	1-7/8	2-1/4	3/16	1.850 ±.015	0.210 ±.005	2.243	1.873	2.250	1.880	2.215	1.875	2.250	1.910		
2-329	2	2-3/8	3/16	1.975 ±.018	0.210 ±.005	2.368	1.998	2.375	2.005	2.340	2.000	2.375	2.035		
2-330	2-1/8	2-1/2	3/16	2.100 ±.018	0.210 ±.005	2.493	2.123	2.500	2.130	2.465	2.125	2.500	2.160		
2-331	2-1/4	2-5/8	3/16	2.225 ±.018	0.210 ±.005	2.618	2.248	2.625	2.255	2.590	2.250	2.625	2.285		
2-332	2-3/8	2-3/4	3/16	2.350 ±.020	0.210 ±.005	2.743	2.373	2.750	2.380	2.715	2.375	2.750	2.410		

Allegheny York

O-Ring Size and Installation Chart, cont'd.

SIZE CHART						INSTALLATION DATA - GROOVE DIMENSIONS									
UNIVERSAL SERIES AS568A DASH NOS.	NOMINAL SIZE			ACTUAL SIZE		RECIPROCATING SEALS				STATIC SEALS				ROTARY SEALS	
						I.D. SEALING		O.D. SEALING		I.D. SEALING		O.D. SEALING		I.D. SEALING	
	I.D.	O.D.	W.	I.D.	W.	A	B	A	B	A	B	A	B	A	B
2-333	2-1/2	2-7/8	3/16	2.475 ±.020	0.210 ±.005	2.868	2.498	2.875	2.505	2.840	2.500	2.875	2.535		
2-334	2-5/8	3	3/16	2.600 ±.020	0.210 ±.005	2.993	2.623	3.000	2.630	2.965	2.625	3.000	2.660		
2-335	2-3/4	3-1/8	3/16	2.725 ±.020	0.210 ±.005	3.118	2.748	3.125	2.755	3.090	2.750	3.125	2.785		
2-336	2-7/8	3-1/4	3/16	2.850 ±.020	0.210 ±.005	3.243	2.873	3.250	2.880	3.215	2.875	3.250	2.910		
2-337	3	3-3/8	3/16	2.975 ±.024	0.210 ±.005	3.368	2.998	3.375	3.005	3.340	3.000	3.375	3.035		
2-338	3-1/8	3-1/2	3/16	3.100 ±.024	0.210 ±.005	3.493	3.123	3.500	3.130	3.465	3.125	3.500	3.160		
2-339	3-1/4	3-5/8	3/16	3.225 ±.024	0.210 ±.005	3.618	3.248	3.625	3.255	3.590	3.250	3.625	3.285		
2-340	3-3/8	3-3/4	3/16	3.350 ±.024	0.210 ±.005	3.743	3.373	3.750	3.380	3.715	3.375	3.750	3.410		
2-341	3-1/2	3-7/8	3/16	3.475 ±.024	0.210 ±.005	3.868	3.498	3.875	3.505	3.840	3.500	3.875	3.535		
2-342	3-5/8	4	3/16	3.600 ±.028	0.210 ±.005	3.993	3.623	4.000	3.630	3.965	3.625	4.000	3.660		
2-343	3-3/4	4-1/8	3/16	3.725 ±.028	0.210 ±.005	4.118	3.748	4.125	3.755	4.090	3.750	4.125	3.785		
2-344	3-7/8	4-1/4	3/16	3.850 ±.028	0.210 ±.005	4.243	3.873	4.250	3.880	4.215	3.875	4.250	3.910		
2-345	4	4-3/8	3/16	3.975 ±.028	0.210 ±.005	4.368	3.998	4.375	4.005	4.340	4.000	4.375	4.035		
2-346	4-1/8	4-1/2	3/16	4.100 ±.028	0.210 ±.005	4.493	4.123	4.500	4.130	4.465	4.125	4.500	4.160		
2-347	4-1/4	4-5/8	3/16	4.225 ±.030	0.210 ±.005	4.618	4.248	4.625	4.255	4.590	4.250	4.625	4.285		
2-348	4-3/8	4-3/4	3/16	4.350 ±.030	0.210 ±.005	4.743	4.373	4.750	4.380	4.715	4.375	4.750	4.410		
2-349	4-1/2	4-7/8	3/16	4.475 ±.030	0.210 ±.005	4.868	4.498	4.875	4.505	4.840	4.500	4.875	4.535		
2-350	4-5/8	5	3/16	4.600 ±.030	0.210 ±.005					4.965	4.625	5.000	4.660		
2-351	4-3/4	5-1/8	3/16	4.725 ±.030	0.210 ±.005					5.090	4.750	5.125	4.785		
2-352	4-7/8	5-1/4	3/16	4.850 ±.030	0.210 ±.005					5.215	4.875	5.250	4.910		
2-353	5	5-3/8	3/16	4.975 ±.037	0.210 ±.005					5.340	5.000	5.375	5.035		
2-354	5-1/8	5-1/2	3/16	5.100 ±.037	0.210 ±.005					5.465	5.125	5.500	5.160		
2-355	5-1/4	5-5/8	3/16	5.225 ±.037	0.210 ±.005					5.590	5.250	5.625	5.285		
2-356	5-3/8	5-3/4	3/16	5.350 ±.037	0.210 ±.005					5.715	5.375	5.750	5.410		
2-357	5-1/2	5-7/8	3/16	5.475 ±.037	0.210 ±.005					5.840	5.500	5.875	5.535		
2-358	5-5/8	6	3/16	5.600 ±.037	0.210 ±.005					5.965	5.625	6.000	5.660		
2-359	5-3/4	6-1/8	3/16	5.725 ±.037	0.210 ±.005					6.090	5.750	6.125	5.785		
2-360	5-7/8	6-1/4	3/16	5.850 ±.037	0.210 ±.005					6.215	5.875	6.250	5.910		
2-361	6	6-3/8	3/16	5.975 ±.037	0.210 ±.005					6.340	6.000	6.375	6.035		
2-362	6-1/4	6-5/8	3/16	6.225 ±.040	0.210 ±.005					6.590	6.250	6.625	6.285		
2-363	6-1/2	6-7/8	3/16	6.475 ±.040	0.210 ±.005					6.840	6.500	6.875	6.535		
2-364	6-3/4	7-1/8	3/16	6.725 ±.040	0.210 ±.005					7.090	6.750	7.125	6.785		
2-365	7	7-3/8	3/16	6.975 ±.040	0.210 ±.005					7.340	7.000	7.375	7.035		
2-366	7-1/4	7-5/8	3/16	7.225 ±.045	0.210 ±.005					7.590	7.250	7.625	7.285		
2-367	7-1/2	7-7/8	3/16	7.475 ±.045	0.210 ±.005					7.840	7.500	7.875	7.535		
2-368	7-3/4	8-1/8	3/16	7.725 ±.045	0.210 ±.005					8.090	7.750	8.125	7.785		
2-369	8	8-3/8	3/16	7.975 ±.045	0.210 ±.005					8.340	8.000	8.375	8.035		
2-370	8-1/4	8-5/8	3/16	8.225 ±.050	0.210 ±.005					8.590	8.250	8.625	8.285		
2-371	8-1/2	8-7/8	3/16	8.475 ±.050	0.210 ±.005					8.840	8.500	8.875	8.535		
2-372	8-3/4	9-1/8	3/16	8.725 ±.050	0.210 ±.005					9.090	8.750	9.125	8.785		
2-373	9	9-3/8	3/16	8.975 ±.050	0.210 ±.005					9.340	9.000	9.375	9.035		
2-374	9-1/4	9-5/8	3/16	9.225 ±.050	0.210 ±.005					9.590	9.250	9.625	9.285		
2-375	9-1/2	9-7/8	3/16	9.475 ±.050	0.210 ±.005					9.840	9.500	9.875	9.535		
2-376	9-3/4	10-1/8	3/16	9.725 ±.050	0.210 ±.005					10.090	9.750	10.125	9.785		
2-377	10	10-3/8	3/16	9.975 ±.050	0.210 ±.005					10.340	10.000	10.375	10.035		
2-378	10-1/2	10-7/8	3/16	10.475 ±.060	0.210 ±.005					10.840	10.500	10.875	10.535		
2-379	11	11-3/8	3/16	10.975 ±.060	0.210 ±.005					11.340	11.000	11.375	11.035		
2-380	11-1/2	11-7/8	3/16	11.475 ±.065	0.210 ±.005					11.840	11.500	11.875	11.535		
2-381	12	12-3/8	3/16	11.975 ±.065	0.210 ±.005					12.340	12.000	12.375	12.035		
2-382	13	13-3/8	3/16	12.975 ±.065	0.210 ±.005					13.340	13.000	13.375	13.035		
2-383	14	14-3/8	3/16	13.975 ±.070	0.210 ±.005					14.340	14.000	14.375	14.035		
2-384	15	15-3/8	3/16	14.975 ±.070	0.210 ±.005					15.340	15.000	15.375	15.035		
2-385	16	16-3/8	3/16	15.955 ±.075	0.210 ±.005					16.340	16.000	16.375	16.035		
2-386	17	17-3/8	3/16	16.955 ±.080	0.210 ±.005					17.340	17.000	17.375	17.035		
2-387	18	18-3/8	3/16	17.955 ±.085	0.210 ±.005					18.340	18.000	18.375	18.035		
2-388	19	19-3/8	3/16	18.955 ±.090	0.210 ±.005					19.340	19.000	19.375	19.035		
2-389	20	20-3/8	3/16	19.955 ±.095	0.210 ±.005					20.340	20.000	20.375	20.035		
2-390	21	21-3/8	3/16	20.955 ±.095	0.210 ±.005					21.340	21.000	21.375	21.035		
2-391	22	22-3/8	3/16	21.955 ±.100	0.210 ±.005					22.340	22.000	22.375	22.035		
2-392	23	23-3/8	3/16	22.940 ±.105	0.210 ±.005					23.340	23.000	23.375	23.035		
2-393	24	24-3/8	3/16	23.940 ±.110	0.210 ±.005					24.340	24.000	24.375	24.035		
2-394	25	25-3/8	3/16	24.940 ±.115	0.210 ±.005					25.340	25.000	25.375	25.035		
2-395	26	26-3/8	3/16	25.940 ±.120	0.210 ±.005					26.340	26.000	26.375	26.035		
2-401	1-1/2	2	1/4	1.475 ±.015	0.275 ±.006										
2-402	1-5/8	2-1/8	1/4	1.600 ±.015	0.275 ±.006										
2-403	1-3/4	2-1/4	1/4	1.725 ±.015	0.275 ±.006										
2-404	1-7/8	2-3/8	1/4	1.850 ±.015	0.275 ±.006										
2-405	2	2-1/2	1/4	1.975 ±.018	0.275 ±.006										
2-406	2-1/8	2-5/8	1/4	2.100 ±.018	0.275 ±.006										
2-407	2-1/4	2-3/4	1/4	2.225 ±.018	0.275 ±.006										

Allegheny York

O-Ring Size and Installation Chart, cont'd.

SIZE CHART						INSTALLATION DATA - GROOVE DIMENSIONS									
UNIVERSAL SERIES AS568A DASH NOS.	NOMINAL SIZE			ACTUAL SIZE		RECIPROCATING SEALS				STATIC SEALS				ROTARY SEALS	
						I.D. SEALING		O.D. SEALING		I.D. SEALING		O.D. SEALING		I.D. SEALING	
	I.D.	O.D.	W.	I.D.	W.	A	B	A	B	A	B	A	B	A	B
2-408	2-3/8	2-7/8	1/4	2.350 ±.020	0.275 ±.006										
2-409	2-1/2	3	1/4	2.475 ±.020	0.275 ±.006										
2-410	2-5/8	3-1/8	1/4	2.600 ±.020	0.275 ±.006										
2-411	2-3/4	3-1/4	1/4	2.725 ±.020	0.275 ±.006										
2-412	2-7/8	3-3/8	1/4	2.850 ±.020	0.275 ±.006										
2-413	3	3-1/2	1/4	2.975 ±.024	0.275 ±.006										
2-414	3-1/8	3-5/8	1/4	3.100 ±.024	0.275 ±.006										
2-415	3-1/4	3-3/4	1/4	3.225 ±.024	0.275 ±.006										
2-416	3-3/8	3-7/8	1/4	3.350 ±.024	0.275 ±.006										
2-417	3-1/2	4	1/4	3.475 ±.024	0.275 ±.006										
2-418	3-5/8	4-1/8	1/4	3.600 ±.028	0.275 ±.006										
2-419	3-3/4	4-1/4	1/4	3.725 ±.028	0.275 ±.006										
2-420	3-7/8	4-3/8	1/4	3.850 ±.028	0.275 ±.006										
2-421	4	4-1/2	1/4	3.975 ±.028	0.275 ±.006										
2-422	4-1/8	4-5/8	1/4	4.100 ±.028	0.275 ±.006										
2-423	4-1/4	4-3/4	1/4	4.225 ±.030	0.275 ±.006										
2-424	4-3/8	4-7/8	1/4	4.350 ±.030	0.275 ±.006										
2-425	4-1/2	5	1/4	4.475 ±.033	0.275 ±.006	4.971	4.497	5.002	4.528	4.952	4.500	5.000	4.548		
2-426	4-5/8	5-1/8	1/4	4.600 ±.033	0.275 ±.006	5.096	4.622	5.127	4.653	5.077	4.625	5.125	4.673		
2-427	4-3/4	5-1/4	1/4	4.725 ±.033	0.275 ±.006	5.221	4.747	5.252	4.778	5.202	4.750	5.250	4.798		
2-428	4-7/8	5-3/8	1/4	4.850 ±.033	0.275 ±.006	5.346	4.872	5.377	4.903	5.327	4.875	5.373	4.923		
2-429	5	5-1/2	1/4	4.975 ±.037	0.275 ±.006	5.471	4.997	5.502	5.028	5.452	5.000	5.500	5.048		
2-430	5-1/8	5-5/8	1/4	5.100 ±.037	0.275 ±.006	5.596	5.122	5.627	5.153	5.577	5.125	5.625	5.173		
2-431	5-1/4	5-3/4	1/4	5.225 ±.037	0.275 ±.006	5.721	5.247	5.752	5.278	5.702	5.250	5.750	5.298		
2-432	5-3/8	5-7/8	1/4	5.350 ±.037	0.275 ±.006	5.846	5.372	5.877	5.403	5.827	5.375	5.875	5.423		
2-433	5-1/2	6	1/4	5.475 ±.037	0.275 ±.006	5.971	5.497	6.002	5.528	5.952	5.500	6.000	5.548		
2-434	5-5/8	6-1/8	1/4	5.600 ±.037	0.275 ±.006	6.096	5.622	6.127	5.653	6.077	5.625	6.125	5.673		
2-435	5-3/4	6-1/4	1/4	5.725 ±.037	0.275 ±.006	6.221	5.747	6.252	5.778	6.202	5.750	6.250	5.798		
2-436	5-7/8	6-3/8	1/4	5.850 ±.037	0.275 ±.006	6.346	5.872	6.377	5.903	6.327	5.875	6.375	5.923		
2-437	6	6-1/2	1/4	5.975 ±.037	0.275 ±.006	6.471	5.997	6.502	6.028	6.452	6.000	6.500	6.048		
2-438	6-1/4	6-3/4	1/4	6.225 ±.040	0.275 ±.006	6.721	6.247	6.752	6.278	6.702	6.250	6.750	6.298		
2-439	6-1/2	7	1/4	6.475 ±.040	0.275 ±.006	6.971	6.497	7.002	6.528	6.952	6.500	7.000	6.548		
2-440	6-3/4	7-1/4	1/4	6.725 ±.040	0.275 ±.006	7.221	6.747	7.252	6.778	7.202	6.750	7.250	6.798		
2-441	7	7-1/2	1/4	6.975 ±.040	0.275 ±.006	7.471	6.997	7.502	7.028	7.452	7.000	7.500	7.048		
2-442	7-1/4	7-3/4	1/4	7.225 ±.045	0.275 ±.006	7.721	7.247	7.752	7.278	7.702	7.250	7.750	7.298		
2-443	7-1/2	8	1/4	7.475 ±.045	0.275 ±.006	7.971	7.497	8.002	7.528	7.952	7.500	8.000	7.548		
2-444	7-3/4	8-1/4	1/4	7.725 ±.045	0.275 ±.006	8.221	7.747	8.252	7.778	8.202	7.750	8.250	7.798		
2-445	8	8-1/2	1/4	7.975 ±.045	0.275 ±.006	8.471	7.997	8.502	8.028	8.452	8.000	8.500	8.048		
2-446	8-1/2	9	1/4	8.475 ±.055	0.275 ±.006	8.971	8.497	9.002	8.528	8.952	8.500	9.000	8.548		
2-447	9	9-1/2	1/4	8.975 ±.055	0.275 ±.006	9.471	8.997	9.502	9.028	9.452	9.000	9.500	9.048		
2-448	9-1/2	10	1/4	9.475 ±.055	0.275 ±.006	9.971	9.497	10.002	9.528	9.952	9.500	10.000	9.548		
2-449	10	10-1/2	1/4	9.975 ±.055	0.275 ±.006	10.471	9.997	10.502	10.028	10.452	10.000	10.500	10.048		
2-450	10-1/2	11	1/4	10.475 ±.060	0.275 ±.006	10.971	10.497	11.002	10.528	10.952	10.500	11.000	10.548		
2-451	11	11-1/2	1/4	10.975 ±.060	0.275 ±.006	11.471	10.997	11.502	11.028	11.452	11.000	11.500	11.048		
2-452	11-1/2	12	1/4	11.475 ±.060	0.275 ±.006	11.971	11.497	12.002	11.528	11.952	11.500	12.000	11.548		
2-453	12	12-1/2	1/4	11.975 ±.060	0.275 ±.006	12.471	11.997	12.502	12.028	12.452	12.000	12.500	12.048		
2-454	12-1/2	13	1/4	12.475 ±.060	0.275 ±.006	12.971	12.497	13.002	12.528	12.592	12.500	13.000	12.548		
2-455	13	13-1/2	1/4	12.975 ±.060	0.275 ±.006	13.471	12.997	13.502	13.028	13.452	13.000	13.500	13.048		
2-456	13-1/2	14	1/4	13.475 ±.070	0.275 ±.006	13.971	13.497	14.002	13.528	13.952	13.500	14.000	13.548		
2-457	14	14-1/2	1/4	13.975 ±.070	0.275 ±.006	14.471	13.997	14.502	14.028	14.452	14.000	14.500	14.048		
2-458	14-1/2	15	1/4	14.475 ±.070	0.275 ±.006	14.971	14.497	15.002	14.528	14.952	14.500	15.000	14.548		
2-459	15	15-1/2	1/4	14.975 ±.070	0.275 ±.006	15.471	14.997	15.502	15.028	15.452	15.000	15.500	15.048		
2-460	15-1/2	16	1/4	15.475 ±.070	0.275 ±.006	15.971	15.497	16.000	15.528	15.952	15.500	16.000	15.548		
2-461	16	16-1/2	1/4	15.955 ±.075	0.275 ±.006					16.452	16.000	16.500	16.048		
2-462	16-1/2	17	1/4	16.455 ±.075	0.275 ±.006					16.952	16.500	17.000	16.548		
2-463	17	17-1/2	1/4	16.955 ±.085	0.275 ±.006					17.452	17.000	17.500	17.048		
2-464	17-1/2	18	1/4	17.455 ±.085	0.275 ±.006					17.952	17.500	18.000	17.548		
2-465	18	18-1/2	1/4	17.955 ±.085	0.275 ±.006					18.452	18.000	18.500	18.048		
2-466	18-1/2	19	1/4	18.455 ±.090	0.275 ±.006					18.952	18.500	19.000	18.548		
2-467	19	19-1/2	1/4	18.955 ±.090	0.275 ±.006					19.452	19.000	19.500	19.048		
2-468	19-1/2	20	1/4	19.455 ±.090	0.275 ±.006					19.952	19.500	20.000	19.548		
2-469	20	20-1/2	1/4	19.955 ±.095	0.275 ±.006					20.452	20.000	20.500	20.048		
2-470	21	21-1/2	1/4	20.955 ±.095	0.275 ±.006					21.452	21.000	21.500	21.048		
2-471	22	22-1/2	1/4	21.955 ±.100	0.275 ±.006					22.452	22.000	22.500	22.048		
2-472	23	23-1/2	1/4	22.940 ±.105	0.275 ±.006					23.452	23.000	23.500	23.048		
2-473	24	24-1/2	1/4	23.940 ±.110	0.275 ±.006					24.452	24.000	24.500	24.048		
2-474	25	25-1/2	1/4	24.940 ±.115	0.275 ±.006					25.452	25.000	25.500	25.048		
2-475	26	26-1/2	1/4	25.940 ±.120	0.275 ±.006					26.452	26.000	26.500	26.048		